ECONOMIC FEASIBILITY OF FAEE PRODUCTION FROM SOYBEAN OIL DEODORIZER DISTILLATE VIA ENZYMATIC PROCESS

Ana B. M. Cansian[1*], Ana C. Vieira[3], Felipe F. Furlan[1,2], Ruy de Sousa Jr.[1,2] & Paulo W. Tardioli[1,2]

[1] *Chemical Engineering/ Graduate Program in Chemical Engineering, Federal University of São Carlos (UFSCar), São Carlos, Brazil.*
[2] *Chemical Engineering/ Department of Chemical Engineering, Federal University of São Carlos (UFSCar), São Carlos, Brazil.*
[3] *Chemical Engineering/ Graduate Program in Chemical Engineering, Institute of Science and Technology, Federal University of Alfenas (UNIFAL), Poços de Caldas, Brazil.*
** Corresponding author's email address: anamoulin@estudante.ufscar.br or ana_barbara_moulin@hotmail.com*

ABSTRACT

The study conducted a techno-economic analysis of the enzymatic production of fatty acid ethyl esters (FAEE) using soybean oil deodorizer distillate (SODD) as raw material. The process involved two stages: enzymatic hydrolysis of SODD to produce free fatty acids (FFA) and subsequent enzymatic esterification of FFAs with ethanol to produce FAEEs. Modeling and simulation were based on mass and energy balances using EMSO software. Capital costs for plant installation (CAPEX) and operational costs (OPEX) were calculated. The calculation basis was 1 kmol/h of SODD consumed, generating 100.24 kg/h of product ~81% in ethyl esters of fatty acids, and obtained a FAEE's selling price of ~$8.60 / kg.

Keywords: Soybean Oil Deodorizer Distillate (SODD). Free Fatty Acids (FFA). Fatty Acid Ethyl Esters (FAEE).

1 INTRODUCTION

Bioprocess researchers are incessantly seeking ways to reduce environmental impact while maintaining profitability. Meanwhile, green chemistry's main pillars are the efficient use of raw materials and the possibility of reducing or adding value to wastes and by-products[1,2].

In the biorefinery context, a significant by-product generated during soybean oil refining is Soybean Oil Deodorizer Distillate (SODD). The oil goes through a distillation at this step to remove the compounds that give it unwanted flavor and aroma[3,4]. SODD mainly consists of lipid components, including Free Fatty Acids (FFA) (18 to 80%), mono-, di-, and triglycerides (5 to 65%), and tocopherols (2 to 20%)[5–7].

The large amounts of FFA and acyl glycerides make this by-product attractive for enzymatic conversion into fatty acid esters, such as those found in biodiesel[4,8–10], biolubricants[11], biosurfactants[12], among others. In particular, enzymatic hydrolysis breaks acyl glycerides into FFAs, and in sequence, enzymatic esterification using ethanol transforms FFAs into ethyl esters of fatty acids[6]. Therefore, SODD, as an alternative raw material to biodiesel, does not compete with the use of vegetable oils employed in food industries[13]. Despite the already experimentally proven alternative, it is necessary to assess viability for any process to become applicable on a large scale in industry. Some works provide techno-economic analysis for biodiesel using vegetable oils[14,15], from microalgae[16,17], through biomass fermentation[18,19], but there is no such analysis using SODD. In this context, the present work aims to conduct a techno-economic analysis of the production process of fatty acid ethyl esters based on hydrolysis followed by esterification, both enzymatic and using SODD as raw material.

2 MATERIAL & METHODS

The modeling and simulation of the process took place as described in Figure 1, using the open software EMSO. All proportions of reagents, enzymatic load, temperature, and stirring, among other information, were given by literature[6]. In the first stage, corresponding to the R - 101 reactor, SODD-water (1:4 mass ratio), and the free enzyme PFL (*Pseudomonas fluorescens* lipase) (5g of enzyme mass for every 100g of SODD) are added at 37° C and 200 rpm for 48 hours. Water at 90°C is combined with the first reactor outlet (stream 6) in a mixer and goes to a centrifuge, where the oily phase is separated and rewashed. Stream 12 corresponds to the oil phase entering an evaporator to dry the remaining water. Afterwards, the second reaction stage takes place in R - 102, where a stream rich in FFA's from SODD is added to ethanol (1:3.64 molar ratio), and free *Eversa* enzyme at 8.5% (m/v), at 35°C and 200 rpm for 48 hours. Washing occurs in the same way as the previous step, twice, and the oily phase passes through an evaporator to remove the remaining ethanol, generating a stream with a high content of ethyl esters of fatty acids (~81% by mass). All mass and energy balances that model the process were described in previous work[12], as well as the equations to obtain CAPEX (Plant construction cost, equipment, connections) and OPEX (Operational cost that includes reagents, labor, supervision, and maintenance, among others).

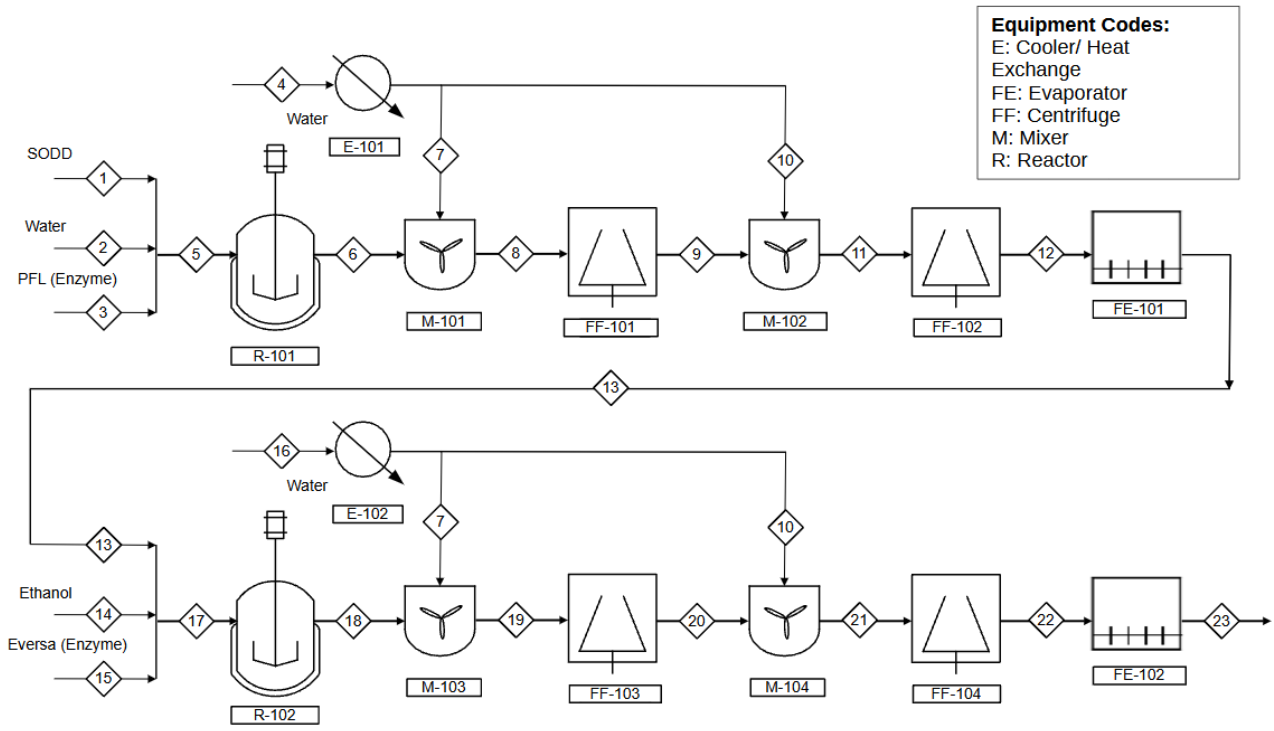

Figure 1 Process diagram for modeling and simulation of two-step fatty acid ethyl ester production (SODD hydrolysis followed by FFAs esterification).

3 RESULTS & DISCUSSION

Although the process occurs in batches, the simulation is continuous for calculations. In this scenario, optimizing the use of available equipment in a continuous operating cycle is possible, reducing plant installation costs. To this end, a Gant chart was created. Figure 2 shows that the cycle between two outputs of the same process is 48 hours. As other equipment has a shorter usage time than reactors, reusing them throughout the process is possible.

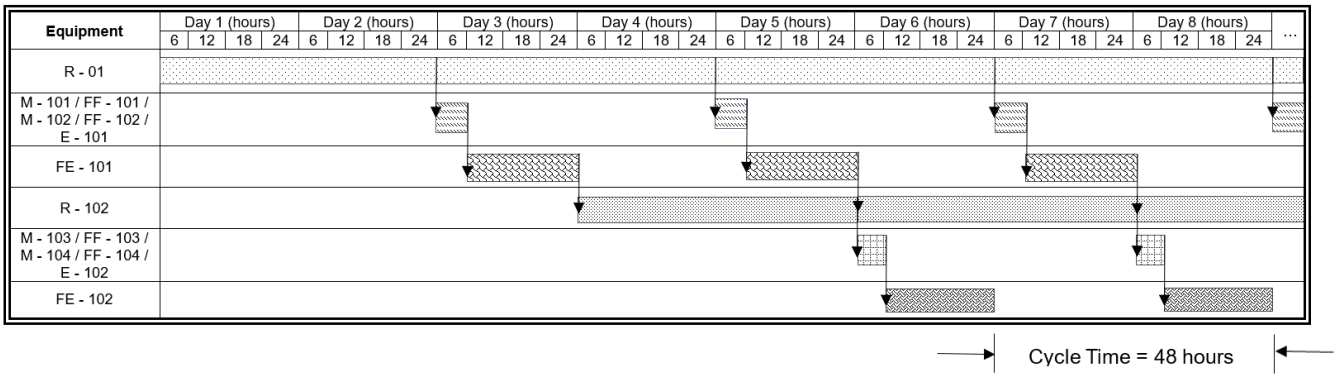

Figure 2 Gant chart for equipment costs optimization.

Table 1 shows the values of the process equipment, considering a minimum rate of return of 11% and a 25-year useful life of the plant. The calculation basis is 1 kmol/h of SODD consumed, generating 100.24 kg of product ~81% in ethyl esters of fatty acids. Note that mixers (considered agitation tanks) represent the highest costs among other equipment since a 1:1 volume of water is added to the reactors' exit. Figure 3 shows the operational costs. It can be seen that labor represents half of the OPEX, followed by energy, while reagent costs are the last. Finally, we obtained an FAEE's selling price of ~$8.60 / kg or $7.74/ L. As seen in Table 2, the value obtained is below some works, but above other. Compared to the biodiesel market price, the process still needs to be more competitive. However, with the optimization of plant scale, energy consumption, reaction time, and enzyme, it may be possible to make this process economically viable.

Table 1 Equipment costs with installation included (CAPEX).

Equipment	number	Total cost (US$)
Reactor (R – 101)	1	132,562.00
Reactor (R – 102)	1	42,855.00
Mixer - Agited tank (M – 10x)	2	161,779.00
Heat exchanger (E – 10x)	1	115,643.00
Evaporator (FE – 10x)	1	45,621.50
Centrifuge (FF – 10x)	2	82,779.70

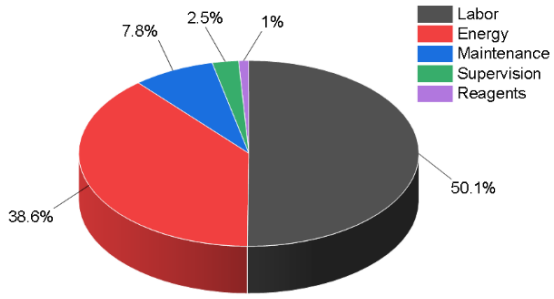

Figure 3 OPEX costs.

Table 2 Comparison of techno-economic analysis.

Price	Price ($/L)	Source
1.94 - 3.35 €/L	2.08 - 3.55	[20]
4 $/kg	3.6	[21]
49.46 - 75.77 $/L	49.46 - 75.77	[22]
12.73 - 31.61 $/gal	3.36 – 8.35	[23]
0.42 - 0.97 $/L	0.42 - 0.97	[24]
1.50 - 3.68 $/kg	1.35 - 3.31	[25]

4 CONCLUSION

From the economic viability analysis of the enzymatic production of FAEE's, it was possible to find a FAEE's selling price of ~US$8.60 / kg. When compared to others works, it could be more competitive with a future process optimization. Despite this, SODD is an excellent source of fatty acids, and its inclusion in the production of biomolecules is fundamental to green chemistry. In conclusion, the techno-economic analysis presented in this study highlights the potential of enzymatic FAEE production using SODD as a raw material and further optimization can improve the economic viability of the process.

REFERENCES

[1] ANASTAS, P., EGHBALI, N. 2010. Chem. Soc. Rev. 39 (1). 301-312. doi:10.1039/b918763b
[2] DIACON, A., CĂLINESCU, I., VINATORU, M., et al. 2021. Molecules. 26 (14). 1-9. doi: 10.3390/molecules26144388
[3] VISIOLI, L. J., NUNES, A. L. B., WANCURA, J. H. C., ENZWEILER, H., VERNIER, L. J., DE CASTILHOS F. 2023. Fuel. 351. doi: 10.1016/j.fuel.2023.128954
[4] YIN, X., DUAN, X., YOU, Q., DAI, C., TAN, Z., ZHU, X. 2016. Energy Convers Manag. 112. 199-207. doi: 10.1016/j.enconman.2016.01.026
[5] BEZERRA, I. D., BELISÁRIO, C. M., FAVARETO, R., TAHAM, T., CASTEJON, L. V. 2022. Brazilian Journal of Food Technology. 25. doi:10.1590/1981-6723.15621
[6] VIEIRA, A. C., CANSIAN, A. B. M., GUIMARÃES, J. R., VIEIRA, A. M. S., FERNANDEZ-LAFUENTE, R., TARDIOLI, P. W.. 2021. Catalysts. 11 (12). doi:10.3390/catal11121486
[7] XIONG, Y. W., GO, A. W., ALIVIO, R. K. O., et al. 2022. Renew Energy. 197. 528-544. doi:10.1016/j.renene.2022.07.104
[8] VISIOLI, L. J., DE CASTILHOS, F., CARDOZO-FILHO, L., DE MELLO, B. T. F., DA SILVA, C. 2016. Fuel Processing Technology. 149. 326-331. doi:10.1016/j.fuproc.2016.04.038
[9] YIN X, ZHANG X, WAN M, ET AL. 2017. Ultrason Sonochem. 2017;37:136-143. doi:10.1016/j.ultsonch.2016.12.036
[10] LV, W., WU, C., LIN, S., WANG, X., WANG, Y. 2021. ACS Omega. 6 (13). 9141-9152. doi:10.1021/acsomega.1c00333
[11] DE ARAUJO-SILVA, R., VIEIRA, A. C., GIORDANO, R. C., FERNANDEZ-LAFUENTE, R., TARDIOLI, P. W. 2022. Molecules. 27 (9). doi:10.3390/molecules27092692
[12] CANSIAN, A. B. M., TARDIOLI, P. W., FURLAN, F. F., DE SOUSA JR., R. 2022. Chemical Industry and Chemical Engineering Quarterly. 28 (4). 265-276. doi:10.2298/CICEQ210621001C
[13] CHRISTOPHE, G., KUMAR, V., NOUAILLE, R., et al. 2012. Arch Biol Technol. 55 (1). 29-46.
[14] APOSTOLAKOU, A. A., KOOKOS, I. K., MARAZIOTI, C., ANGELOPOULOS, K. C. 2009. Fuel Processing Technology. 90 (7-8). 1023-1031. doi:10.1016/j.fuproc.2009.04.017
[15] QUINTERO, J. A., FELIX, E. R., RINCÓN, E. L., et al. 2012. Energy Policy. 43. 427-435. doi:10.1016/j.enpol.2012.01.029
[16] CASTRO, J. S., FERREIRA, J., MAGALHÃES, I. B., et al. 2023. Renewable and Sustainable Energy Reviews. 187. doi:10.1016/j.rser.2023.113781
[17] MU, D., XIN, C., ZHOU, W. 2019. Elsevier. 281-292. doi:10.1016/B978-0-12-817536-1.00018-7
[18] HUANG, H., LONG, S., SINGH, V. 2016. Biofuels, Bioproducts and Biorefining. 10 (3). 299-315. doi:10.1002/bbb.1640
[19] VLYSIDIS, A., BINNS, M., WEBB, C., THEODOROPOULOS, C. 2011. Energy. 36 (8). 4671-4683. doi:10.1016/j.energy.2011.04.046
[20] DELRUE, F., SETIER, P. A., SAHUT, C., et al. 2012. Bioresour Technol. 111. 191-200. doi:10.1016/j.biortech.2012.02.020
[21] AMER, L., ADHIKARI, B., PELLEGRINO, J. 2011. Bioresour Technol. 102 (20). 9350-9359. doi:10.1016/j.biortech.2011.08.010
[22] HARUN, R., DAVIDSON, M., DOYLE, M., GOPIRAJ, R., DANQUAH, M., FORDE, G. 2011. Biomass Bioenergy. 35 (1). 741-747. doi:10.1016/j.biombioe.2010.10.007
[23] RICHARDSON, J. W., JOHNSON, M. D., OUTLAW, J. L. 2012. Algal Res. 1 (1). 93-100. doi:10.1016/j.algal.2012.04.001
[24] NAGARAJAN S, CHOU SK, CAO S, WU C, ZHOU Z. 2013. Bioresour Technol. 145. 150-156. doi:10.1016/j.biortech.2012.11.108
[25] CASTRO, J. S., FERREIRA, J., MAGALHÃES, I. B., et al. 2023. Renewable and Sustainable Energy Reviews. 2023. 187. doi:10.1016/j.rser.2023.113781

ACKNOWLEDGEMENTS

This work was supported by São Paulo Research Foundation (FAPESP) [2016/10636-8], in part by Coordenação de Aperfeiçoamento de Pessoal de Nível Superior (CAPES), Finance Code 001, and by CNPq (doctoral scholarship, grant number 141111/2020-8).